SANDEN

Delivering Excellence

AUTOMOTIVE
A/C Compressors

just when you need it most...

SANDEN INTERNATIONAL (USA), INC.
601 S. Sanden Blvd., Wylie, TX 75098 • Tel: (01) 972-442-8400 • Fax: (01) 972-442-8700
Website: www.sanden.com

The Sanden Advantage

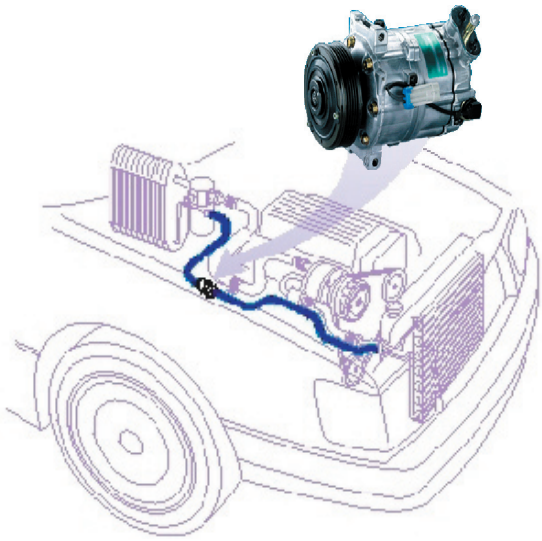

Sanden is a premier innovator and manufacturer of compressors for mobile HVAC applications. Sanden has been producing automotive compressors for the worlds top vehicle manufacturers for over 30 years. With facilities around the globe, Sanden has a diverse technical support network to support the global automotive marketplace.

Whether the application is for light vehicle, heavy truck, or off-highway vehicles, Sanden builds a new, high quality compressor that exceeds customer expectations. Sanden has achieved the highest quality certifications and customer performance awards. Our ulitimate goal is to deliver excellence to our customers.

Why Choose New Over Remanufactured?

- ***Superior Parts***

  Sanden compressors are manufactured with superior quality parts and castings that are machined to OEM specifications. Remanufactured compressors are made from a used compressor core and used or non-OEM approved parts. These used and out of spec parts will degrade the cooling performance of the compressor.

- ***Superior Quality Control***

  Sanden has quality systems that are registered to the highest automotive OEM standards: ISO9001:2002, ISO14001, and TS-16949. Our manufacturing and quality control processes are audited by the largest vehicle manufacturers in the world to ensure that the highest quality standards are maintained. Remanufactured compressors are not tested to OEM specifications and are not built with the same rigorous quality checks as a new Sanden compressor.

- ***Product Availability***

  Remanufactured compressors rely on the availability of used cores to support the remanufacturing process. If used cores are not available, remanufactured compressors can not be produced. New Sanden compressors are produced at several manufacturing facilities all over the world to quickly support customer demand.

- ***Increased Customer Satisfaction***

  You might save a few dollars with a remanufactured compressor, but is the cost savings worth losing your customers? Reman units that start with used cores and are refurbished with questionable parts and processes will not last as long as a new Sanden compressor. The price gap between reman and new continues to shrink. When you consider the benefits, the value of a new compressor is clearly superior to remanufactured.

Sanden (NEW) OEM Replacement Compressors

YEAR	CYL	LTR	ENGINE	Compressor Type	SANDEN PN#
AUDI					
TT					
2006-02	L4	1.8L	GAS; FI TURBO	SD7V16	4255
2001-00	L4	1.8L	GAS; FI TURBO	SD7V16	4257
TT QUATTRO					
2008	V6	3.2L	GAS; FI TURBO	SD7V16	4255
2006-04	V6	3.2L	GAS; FI TURBO	SD7V16	4255
2006-02	L4	1.8L	GAS; FI TURBO	SD7V16	4255
2001-00	L4	1.8L	GAS; FI TURBO	SD7V16	4257
BUICK					
RAINIER					
2007-04	L6	4.2L	GAS; FI	TRSA12	4910
2007-04	V8	5.3L	GAS; FI	TRSA12	4911
CADILLAC					
ESCALADE					
2000-99	V8	5.7L	GAS; FI	SD7H15	4440
CHEVROLET					
ASTRO					
2005-96	V6	4.3L	GAS; FI	SD7H15	4390
BLAZER					
2005-99	V6	4.3L	GAS; FI	SD7H15	4261
1998-96	V6	4.3L	GAS; FI	SD7H15	4440
C1500 PICKUP					
1999-96	V8	5.0L	GAS; FI	SD7H15	4440
1999-96	V8	5.7L	GAS; FI	SD7H15	4440
1998-96	V8	6.5L	DIESEL; FI TURBO	SD7H15	4440
1998-96	V6	4.3L	GAS; FI	SD7H15	4440
C1500 SUBURBAN					
1999-96	V8	6.5L	DIESEL; FI TURBO	SD7H15	4440
1999-96	V8	5.7L	GAS; FI	SD7H15	4440
C2500 PICKUP					
2000-96	V8	6.5L	DIESEL; FI TURBO	SD7H15	4440
2000-96	V8	5.7L	GAS; FI	SD7H15	4440
2000-96	V8	7.4L	GAS; FI	SD7H15	4440
1998-96	V8	5.0L	GAS; FI	SD7H15	4440
C2500 SUBURBAN					
1999-96	V8	6.5L	DIESEL; FI TURBO	SD7H15	4440
1999-96	V8	5.7L	GAS; FI	SD7H15	4440
1999-96	V8	7.4L	GAS; FI	SD7H15	4440
C3500 PICKUP					
2002-96	V8	6.5L	DIESEL; FI TURBO	SD7H15	4440
2000-96	V8	7.4L	GAS; FI	SD7H15	4440
2000-96	V8	5.7L	GAS; FI	SD7H15	4440
EXPRESS 1500					
2000-96	V6	4.3L	GAS; FI	SD7H15	4261
2000-96	V8	5.0L	GAS; FI	SD7H15	4261
2000-96	V8	5.7L	GAS; FI	SD7H15	4261
EXPRESS 2500					
2000-96	V8	6.5L	DIESEL; FI TURBO	SD7H15	4261
2000-96	V6	4.3L	GAS; FI	SD7H15	4261
2000-96	V8	5.0L	GAS; FI	SD7H15	4261
2000-96	V8	5.7L	GAS; FI	SD7H15	4261
EXPRESS 3500					
2000-96	V8	6.5L	DIESEL; FI TURBO	SD7H15	4261
2000-96	V8	5.7L	GAS; FI	SD7H15	4261
2000-96	V8	7.4L	GAS; FI	SD7H15	4261

Sanden (NEW) OEM Replacement Compressors

YEAR	CYL	LTR	ENGINE	Compressor Type	SANDEN PN#
CHEVROLET (cont.)					
G30 VAN					
1996	V8	6.5L	DIESEL; FI TURBO	SD7H15	4261
1996	V8	5.7L	GAS; FI	SD7H15	4261
1996	V8	7.4L	GAS; FI	SD7H15	4261
P30 VAN					
1999-96	V8	6.5L	DIESEL; FI	SD7H15	4440
1999-96	V6	4.3L	GAS; FI	SD7H15	4440
1999-96	V8	5.7L	GAS; FI	SD7H15	4440
1999-95	V8	7.4L	GAS; FI	SD7H15	4440
1994-93	V8	7.4L	GAS; FI	SD7H15	7803
S10 PICKUP					
2004-99	V6	4.3L	GAS; FI	SD7H15	4261
1998-96	V6	4.3L	GAS; FI	SD7H15	4440
SILVERADO 1500					
2002-99	V6	4.3L	GAS; FI	SD7H15	4261
SILVERADO 2500 HD					
2002-01	V8	6.6L	DIESEL; FI TURBO	SD7H15	4261
SILVERADO 3500					
2002-01	V8	6.6L	DIESEL; FI TURBO	SD7H15	4261
SSR					
2004	V8	5.3L	GAS; FI	TRSA12	4910
TAHOE					
2000-96	V8	5.7L	GAS; FI	SD7H15	4440
1999-96	V8	6.5L	DIESEL; FI TURBO	SD7H15	4440
TRAILBLAZER					
2008-06	V8	6.0L	GAS; FI	TRSA12	4911
2008-03	V8	5.3L	GAS; FI	TRSA12	4911
2008-02	L6	4.2L	GAS; FI	TRSA12	4910
CHRYSLER					
CIRRUS					
2000	L4	2.4L	GAS; FI	TRSA090	4975-AFT
2000	L4	2.0L	GAS; FI	TRSA090	4969-AFT
2000-95	V6	2.5L	GAS; FI	TRSA090	4969-AFT
1997-95	L4	2.4L	GAS; FI	TRSA090	4975-AFT
SEBRING					
2005-01	V6	2.7L	GAS; FI	TRSA090	4976-AFT
2003-01	L4	2.4L	GAS; FI	TRSA090	4975-AFT
2000-95	V6	2.5L	GAS; FI	TRSA090	4969-AFT
1998-96	L4	2.4L	GAS; FI	TRSA090	4975-AFT
DODGE					
B1500 VAN					
1998	V6	3.9L	GAS; FI	TRS105	4979-AFT
1998	V8	5.2L	GAS; FI	TRS105	4979-AFT
1997-96	V6	3.9L	GAS; FI	TRF105	3210
1997-96	V8	5.2L	GAS; FI	TRF105	3210
1995	V6	3.9L	GAS; FI	TRF105	3201
1995	V8	5.2L	GAS; FI	TRF105	3201
B2500 VAN					
1998	V8	5.2L	GAS; FI	TRS105	4979-AFT
1998	V8	5.9L	GAS; FI	TRS105	4979-AFT
1997-96	V6	3.9L	GAS; FI	TRF105	3210
1997-96	V8	5.2L	GAS; FI	TRF105	3210
1997-96	V8	5.9L	GAS; FI	TRF105	3210
1995	V6	3.9L	GAS; FI	TRF105	3201
1995	V8	5.2L	GAS; FI	TRF105	3201
1995	V8	5.9L	GAS; FI	TRF105	3201

Sanden (NEW) OEM Replacement Compressors

YEAR	CYL	LTR	ENGINE	Compressor Type	SANDEN PN#
DODGE (cont.)					
B3500 VAN					
1998	V8	5.2L	GAS; FI	TRS105	4979-AFT
1998	V8	5.9L	GAS; FI	TRS105	4979-AFT
1997-96	V8	5.2L	GAS; FI	TRF105	3210
1997-96	V8	5.9L	GAS; FI	TRF105	3210
1995	V8	5.2L	GAS; FI	TRF105	3201
1995	V8	5.9L	GAS; FI	TRF105	3201
DAKOTA					
2003-02	V8	5.9L	GAS; FI	SD7H15	4356
2003-02	V8	4.7L	GAS; FI	SD7H15	4854-AFT
2003-02	V6	3.9L	GAS; FI	SD7H15	4356
2002-96	L4	2.5L	GAS; FI	SD7H15	4691-AFT
2001-00	V8	4.7L	GAS; FI	SD7H15	4825-AFT
2001-98	V8	5.9L	GAS; FI	SD7H15	4785-AFT
1999-96	V8	5.2L	GAS; FI	SD7H15	4785-AFT
1995-94	L4	2.5L	GAS; FI	SD7H15	4329
1995-94	V6	3.9L	GAS; FI	SD7H15	4359
1995-94	V8	5.2L	GAS; FI	SD7H15	4359
D250 PICKUP					
1993-90	L6	5.9L	DIESEL; FI TURBO	SD709	7702
1993-90	V8	5.9L	GAS; FI	SD709	7702
D350 PICKUP					
1993-90	L6	5.9L	DIESEL; FI TURBO	SD709	7702
DURANGO					
2003	V8	5.9L	GAS; FI W/O Aux Air	SD7H15	4356
2003-02	V8	4.7L	GAS; FI	SD7H15	4854-AFT
2003-02	V8	5.9L	GAS; FI	SD7H15	4331
2001-00	V8	4.7L	GAS; FI	SD7H15	4825-AFT
2001-98	V8	5.9L	GAS; FI	SD7H15	4785-AFT
2000-98	V8	5.2L	GAS; FI	SD7H15	4785-AFT
1999-98	V6	3.9L	GAS; FI	SD7H15	4785-AFT
RAM 1500 PICKUP					
2003-02	V8	5.9L	GAS; FI	SD7H15	4356
2003-02	V6	3.7L	GAS; FI	SD7H15	4854-AFT
2003-02	V8	4.7L	GAS; FI	SD7H15	4854-AFT
2001-96	V6	3.9L	GAS; FI	SD7H15	4785-AFT
2001-96	V8	5.2L	GAS; FI	SD7H15	4785-AFT
2001-96	V8	5.9L	GAS; FI	SD7H15	4785-AFT
1995-94	V6	3.9L	GAS; FI	SD7H15	4359
1995-94	V8	5.2L	GAS; FI	SD7H15	4359
1995-94	V8	5.9L	GAS; FI	SD7H15	4359
RAM 2500 PICKUP					
2005-96	L6	5.9L	DIESEL; FI TURBO	SD7H15	4775-AFT
2003-96	V10	8.0L	GAS; FI	SD7H15	4785-AFT
2002-96	V8	5.9L	GAS; FI	SD7H15	4785-AFT
1996	V8	5.2L	GAS; FI	SD7H15	4785-AFT
1995-94	L6	5.9L	DIESEL; FI TURBO	SD7H15	4330
1995-94	V8	5.2L	GAS; FI	SD7H15	4359
1995-94	V8	5.9L	GAS; FI	SD7H15	4359
1995-94	V10	8.0L	GAS; FI	SD7H15	4359
RAM 3500 PICKUP					
2005-96	L6	5.9L	DIESEL; FI TURBO	SD7H15	4775-AFT
2002-96	V8	5.9L	GAS; FI	SD7H15	4785-AFT
2002-96	V10	8.0L	GAS; FI	SD7H15	4785-AFT
1995-94	L6	5.9L	DIESEL; FI TURBO	SD7H15	4330
1995-94	V8	5.9L	GAS; FI	SD7H15	4359
1995-94	V10	8.0L	GAS; FI	SD7H15	4359

Sanden (NEW) OEM Replacement Compressors

YEAR	CYL	LTR	ENGINE	Compressor Type	SANDEN PN#
DODGE (cont.)					
RAM 1500 VAN					
2003-99	V6	3.9L	GAS; FI	TRS105	4979-AFT
2003-99	V8	5.2L	GAS; FI	TRS105	4979-AFT
2003-99	V8	5.9L	GAS; FI	TRS105	4979-AFT
RAM 2500 VAN					
2003-99	V8	5.9L	GAS; FI	TRS105	4979-AFT
2003-99	V8	5.2L	GAS; FI	TRS105	4979-AFT
2001	V6	3.9L	GAS; FI	TRS105	4979-AFT
RAM 3500 VAN					
2003-99	V8	5.2L	GAS; FI	TRS105	4979-AFT
2003-99	V8	5.9L	GAS; FI	TRS105	4979-AFT
STRATUS					
2005-01	V6	2.7L	GAS; FI	TRSA090	4976-AFT
2003-95	L4	2.4L	GAS; FI	TRSA090	4975-AFT
2000-95	L4	2.0L	GAS; FI	TRSA090	4975-AFT
2000-95	V6	2.5L	GAS; FI	TRSA090	4975-AFT
W250 PICKUP					
1993-90	L6	5.9L	All	SD709	7702
W350 PICKUP					
1993-90	L6	5.9L	DIESEL; FI TURBO	SD709	7702
GMC					
C1500 PICKUP					
1999-96	V8	5.0L	GAS; FI	SD7H15	4440
1999-96	V8	5.7L	GAS; FI	SD7H15	4440
1998-96	V6	4.3L	GAS; FI	SD7H15	4440
1996	V8	6.5L	DIESEL; FI TURBO	SD7H15	4440
C1500 SUBURBAN					
1999-96	V8	6.5L	DIESEL; FI TURBO	SD7H15	4440
1999-96	V8	5.7L	GAS; FI	SD7H15	4440
C2500 PICKUP					
2000-96	V8	6.5L	DIESEL; FI TURBO	SD7H15	4440
2000-96	V8	5.7L	GAS; FI	SD7H15	4440
2000-96	V8	7.4L	GAS; FI	SD7H15	4440
1997-96	V8	5.0L	GAS; FI	SD7H15	4440
C2500 SUBURBAN					
1999-96	V8	6.5L	DIESEL; FI TURBO	SD7H15	4440
1999-96	V8	5.7L	GAS; FI	SD7H15	4440
1999-96	V8	7.4L	GAS; FI	SD7H15	4440
C3500 PICKUP					
2000-96	V8	6.5L	DIESEL; FI TURBO	SD7H15	4440
2000-96	V8	5.7L	GAS; FI	SD7H15	4440
2000-96	V8	7.4L	GAS; FI	SD7H15	4440
ENVOY					
2008-03	V8	5.3L	GAS; FI	TRSA12	4911
2008-02	L6	4.2L	GAS; FI	TRSA12	4910
JIMMY					
2001-99	V6	4.3L	GAS; FI	SD7H15	4261
1998-96	V6	4.3L	GAS; FI	SD7H15	4440
K1500 PICKUP					
1999-96	V8	5.0L	GAS; FI	SD7H15	4440
1999-96	V8	5.7L	GAS; FI	SD7H15	4440
1998-96	V8	6.5L	DIESEL; FI TURBO	SD7H15	4440
1998-96	V6	4.3L	GAS; FI	SD7H15	4440
K1500 SUBURBAN					
1999-96	V8	6.5L	DIESEL; FI TURBO	SD7H15	4440
1999-96	V8	5.7L	GAS; FI	SD7H15	4440

Sanden (NEW) OEM Replacement Compressors

YEAR	CYL	LTR	ENGINE	Compressor Type	SANDEN PN#
GMC (cont.)					
K2500 PICKUP					
2000-96	V8	6.5L	DIESEL; FI TURBO	SD7H15	4440
2000-96	V8	5.7L	GAS; FI	SD7H15	4440
2000-96	V8	7.4L	GAS; FI	SD7H15	4440
K2500 SUBURBAN					
1999-96	V8	6.5L	DIESEL; FI TURBO	SD7H15	4440
1999-96	V8	5.7L	GAS; FI	SD7H15	4440
1999-96	V8	7.4L	GAS; FI	SD7H15	4440
K3500 PICKUP					
2000-96	V8	6.5L	DIESEL; FI TURBO	SD7H15	4440
2000-96	V8	5.7L	GAS; FI	SD7H15	4440
2000-96	V8	7.4L	GAS; FI	SD7H15	4440
P35/P3500 VAN					
1999-96	V8	6.5L	DIESEL; FI TURBO	SD7H15	4440
1999-96	V6	4.3L	GAS; FI	SD7H15	4440
1999-96	V8	5.7L	GAS; FI	SD7H15	4440
1999-96	V8	7.4L	GAS; FI	SD7H15	4440
1994-93	V8	7.4L	GAS; FI	SD7H15	7803
SAFARI					
2005-96	V6	4.3L	GAS; FI	SD7H15	4390
SAVANA 1500					
2000-96	V6	4.3L	GAS; FI	SD7H15	4261
2000-96	V8	5.0L	GAS; FI	SD7H15	4261
2000-96	V8	5.7L	GAS; FI	SD7H15	4261
SAVANA 2500					
2002-99	V6	4.3L	GAS; FI	SD7H15	4261
2000-96	V8	6.5L	DIESEL; FI TURBO	SD7H15	4261
2000-96	V8	5.0L	GAS; FI	SD7H15	4261
2000-96	V8	5.7L	GAS; FI	SD7H15	4261
SAVANA 3500					
2000-96	V8	6.5L	DIESEL; FI TURBO	SD7H15	4261
2000-96	V8	5.7L	GAS; FI	SD7H15	4261
2000-96	V8	7.4L	GAS; FI	SD7H15	4261
SIERRA 1500					
2002-99	V6	4.3L	GAS; FI	SD7H15	4261
SIERRA 2500 HD					
2002-01	V8	6.6L	DIESEL; FI TURBO	SD7H15	4261
SONOMA					
2004-99	V6	4.3L	GAS; FI	SD7H15	4261
1998-96	V6	4.3L	GAS; FI	SD7H15	4440
YUKON					
1999-96	V8	5.7L	GAS; FI	SD7H15	4440
1997-96	V8	6.5L	DIESEL; FI TURBO	SD7H15	4440
SIERRA 3500					
2002-01	V8	6.6L	DIESEL; FI TURBO	SD7H15	4261
JEEP					
CHEROKEE					
2001-97	L6	4.0L	GAS; FI	SD7H15	4691-AFT
2000-97	L4	2.5L	GAS; FI	SD7H15	4691-AFT
1996-94	L4	2.5L	GAS; FI	SD7H15	4727
1996-94	L6	4.0L	GAS; FI	SD7H15	4727
1993-91	L4	2.5L	GAS; FI	SD709	7701
1993-91	L6	4.0L	GAS; FI	SD709	7701
COMANCHE					
1992-91	L4	2.5L	GAS; FI	SD709	7701
1992-89	L6	4.0L	GAS; FI	SD709	7701

Sanden (NEW) OEM Replacement Compressors

YEAR	CYL	LTR	ENGINE	Compressor Type	SANDEN PN#
JEEP (cont.)					
GRAND CHEROKEE					
1993	L6	4.0L	GAS; FI	SD709	7701
LIBERTY					
2005-02	L4	2.4L	GAS; FI	SD7H15	4336
2005-02	V6	3.7L	GAS; FI	SD7H15	4335
WRANGLER					
2002-97	L4	2.5L	GAS; FI	SD7H15	4691-AFT
1998-97	L6	4.0L	GAS; FI	SD7H15	4691-AFT
1995-91	L4	2.5L	GAS; FI	SD709	7701
1995-91	L6	4.0L	GAS; FI	SD709	7701
HONDA					
CIVIC					
2005-02	L4	1.7L	GAS; FI	TRSA090	4914
2005-02	L4	2.0L	GAS; FI	TRSA090	4914
2001	L4	1.7L	GAS; FI	TRSA090	4913
2000-94	L4	1.6L	GAS; FI	TRS090	4993
1995-94	L4	1.5L	GAS; FI	TRS090	4993
CIVIC DEL SOL					
1995-94	L4	1.5L	GAS; FI	TRS090	4993
1995-94	L4	1.6L	GAS; FI	TRS090	4993
CR-V					
2001-97	L4	2.0L	GAS; FI	TRS090	4993
ISUZU					
ASCENDER					
2008-03	L6	4.2L	GAS; FI	TRSA12	4910
2006-03	V8	5.3L	GAS; FI	TRSA12	4911
HOMBRE					
2000-99	V6	4.3L	GAS; FI	SD7H15	4261
LAND ROVER					
RANGE ROVER					
1998-96	V8	4.0L	GAS; FI	TRS105	4916
1998-96	V8	4.6L	GAS; FI	TRS105	4916
MAZDA					
626					
2002-98	L4	2.0L	GAS; FI	SD7H15	4375
2002-98	V6	2.5L	GAS; FI	SD7H15	4688-AFT
PROTEGE					
1998-95	L4	1.5L	GAS; FI	TRS090	4987
1998-95	L4	1.8L	GAS; FI	TRS090	4987
OLDSMOBILE					
BRAVADA					
2004-02	L6	4.2L	GAS; FI	TRSA12	4910
2001-99	V6	4.3L	GAS; FI	SD7H15	4261
1998-96	V6	4.3L	GAS; FI	SD7H15	4440
PLYMOUTH					
BREEZE					
2000-96	L4	2.0L	GAS; FI	TRSA090	4975-AFT
2000-96	L4	2.4L	GAS; FI	TRSA090	4975-AFT
SAAB					
9-3					
2008-03	L4	2.0L	GAS; FI TURBO	PXV16	4575
2002-99	L4	2.0L	GAS; FI TURBO	TRS105	4917
2002-99	L4	2.3L	GAS; FI TURBO	TRS105	4917

Sanden (NEW) OEM Replacement Compressors

YEAR	CYL	LTR	ENGINE	Compressor Type	SANDEN PN#
SAAB (cont.)					
9-5					
2008-04	L4	2.3L	GAS; FI TURBO	PXV16	4576
9000					
1998-97	L4	2.3L	GAS; FI TURBO	SD7H15	8052
VOLKSWAGEN					
BEETLE					
2008-06	L5	2.5L	GAS; FI	PXE16	4574
2005-01	L4	1.9L	DIESEL; FI TURBO	SD7V16	4255
2005-01	L4	1.8L	GAS; FI TURBO	SD7V16	4255
2005-01	L4	2.0L	GAS; FI	SD7V16	4255
2000-99	L4	1.8L	GAS; FI TURBO	SD7V16	4254
2000-98	L4	1.9L	DIESEL; FI TURBO	SD7V16	4254
2000-98	L4	2.0L	GAS; FI	SD7V16	4254
CABRIO					
2002-95	L4	2.0L	GAS; FI	SD7V16	4252
CORRADO					
1994-92	V6	2.8L	GAS; FI	SD7V16	4253
EUROVAN					
1995-93	L5	2.5L	GAS; FI		4265
GOLF					
2007	L4	2.0L	GAS; FI TURBO	PXE16	4573
2006-02	L4	1.9L	DIESEL; FI TURBO	SD7V16	4255
2006-02	L4	1.8L	GAS; FI	SD7V16	4255
2006-02	L4	2.0L	GAS; FI	SD7V16	4255
2001-00	L4	1.8L	GAS; FI	SD7V16	4254
2001-00	L4	2.0L	GAS; FI	SD7V16	4254
2001-99	L4	1.9L	DIESEL; FI TURBO	SD7V16	4254
1999-93	L4	2.0L	GAS; FI	SD7V16	4252
1998-95	V6	2.8L	GAS; FI	SD7V16	4253
1998-93	L4	1.9L	DIESEL; FI TURBO	SD7V16	4252
1998-93	L4	1.8L	GAS; FI	SD7V16	4252
JETTA					
2008-07	L4	2.0L	GAS; FI TURBO	PXE16	4573
2008-06	L5	2.5L	GAS; FI	PXE16	4574
2006-02	L4	1.9L	DIESEL; FI TURBO	SD7V16	4255
2006-02	L4	2.0L	GAS; FI	SD7V16	4255
2005	L5	2.5L	GAS; FI	SD7V16	4255
2005-01	L4	1.8L	GAS; FI TURBO	SD7V16	4255
2004-99	V6	2.8L	GAS; FI	SD7V16	4257
2001	L4	1.9L	DIESEL; FI TURBO	SD7V16	4255
2001	L4	2.0L	GAS; FI	SD7V16	4255
2000	L4	1.8L	GAS; FI TURBO	SD7V16	4254
2000-99	L4	1.9L	DIESEL; FI TURBO	SD7V16	4254
2000-99	L4	2.0L	GAS; FI	SD7V16	4254
1998-95	V6	2.8L	GAS; FI	SD7V16	4253
1998-93	L4	2.0L	GAS; FI	SD7V16	4252
PASSAT					
1997-95	L4	1.9L	DIESEL; FI TURBO	SD7V16	4252
1997-93	V6	2.8L	GAS; FI	SD7V16	4253
1996-93	L4	2.0L	GAS; FI	SD7V16	4252
VOLVO					
960					
1997-95	L6	2.9L	GAS; FI	SD7H15	4263

Quality OEM Replacement Compressors

North American Offices:
Sanden International (USA), Inc.
601 S. Sanden Blvd.
Wylie, TX 75098-4999
Telephone: 877-726-3367
Fax: 972-442-8700
www.sanden.com

Detroit Regional Office:
47772 Halyard Dr.
Plymouth, MI 48170
Telephone: 734-459-1900
Fax: 734-459-1902

Main Corporate Office:
Sanden Corporation
1-31-7, Taito, Taito-ku,
Tokyo 110-8555, Japan
Telephone: +81-3-3835-1321
Fax: +81-3-3833-7096
www.sanden.co.jp

Sanden International (USA), Inc. is a registered IS09001:2002, ISO14001, and TS16949 company
For more information, visit us at www.sanden.com.